Safety City

EXPANDING THE VIEW™
South Carolina ETV

Sponsored by the
SC Department of Public Safety

Cid

Cindy

Wear your bike helmet
every time you ride your bike.

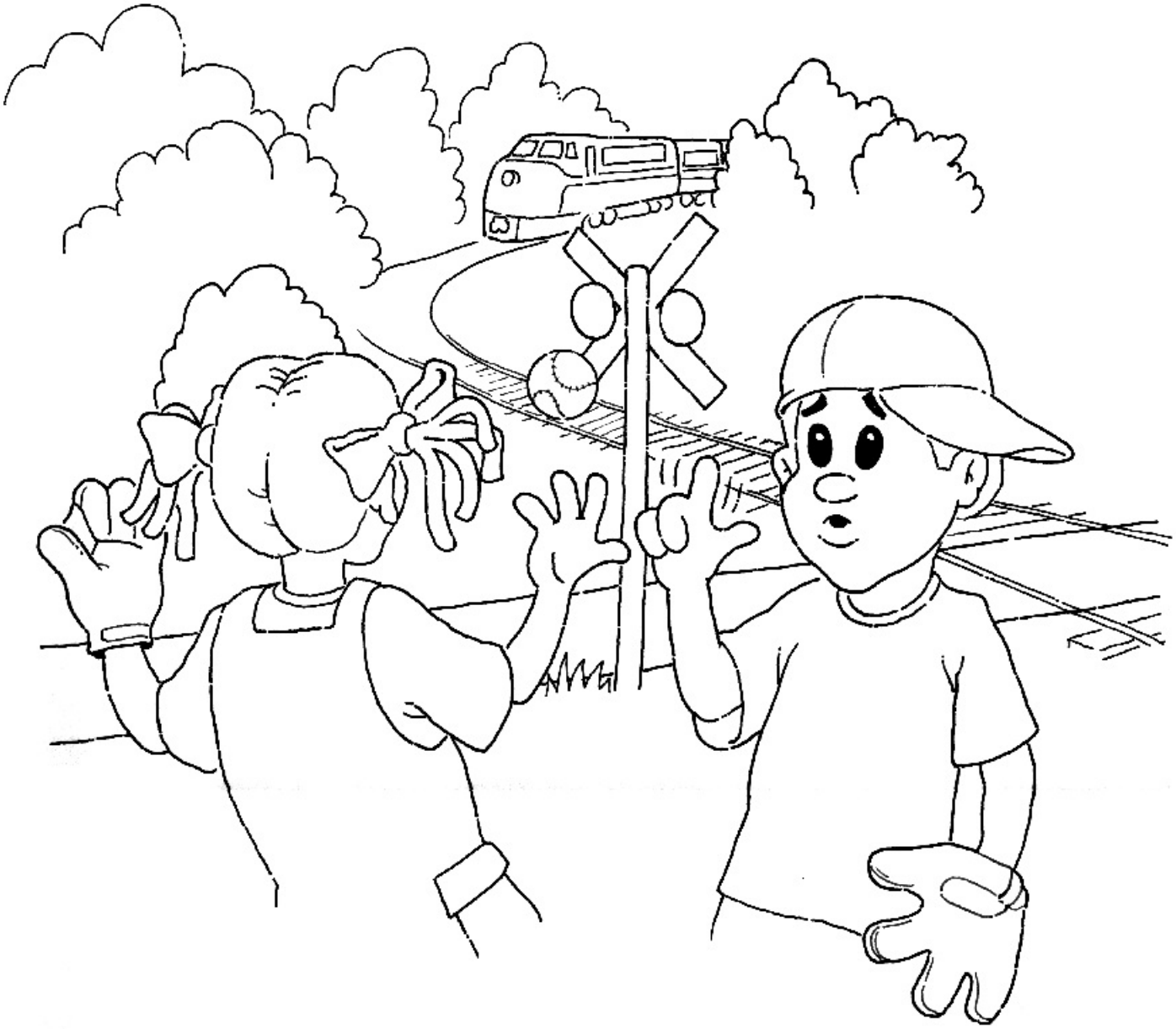

Never play on or near
railroad tracks.

Buckle up your
safety belt on every trip.

Buckle-up. Get ready to cruise!

Buckle-up every time you get in the car.

Be sure to wear your seatbelt the right way.

Remind others to buckle up.

Never take money, candy
or a ride from a stranger.

Stop, look left, right, and left
again before crossing the street.

Traffic Signs

Draw a line from the Traffic Signs to the Same Shape. Color the Signs.

School crossing warning. Marked crosswalk.

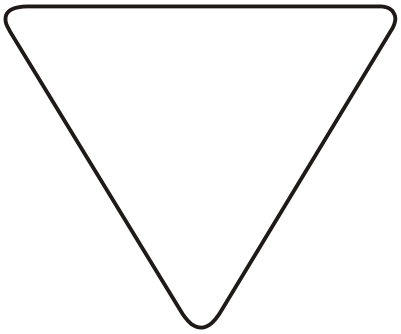

Stop. Look for traffic.

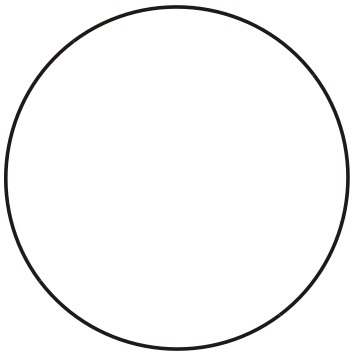

Railroad warning.

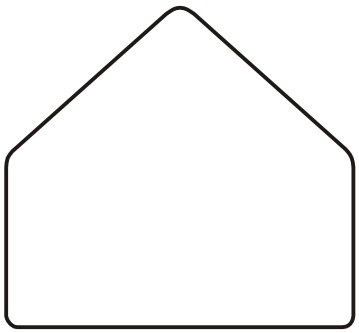

Yield. Stop and look for traffic.

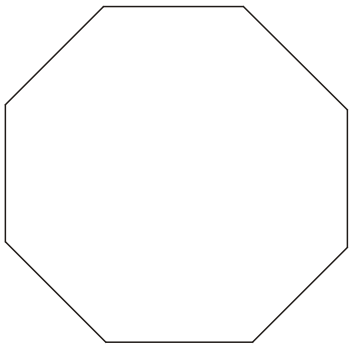

Traffic Signal

RED light means to stop.
YELLOW light means to slow down. Get ready to stop.
GREEN light means to go.

Color the lights.

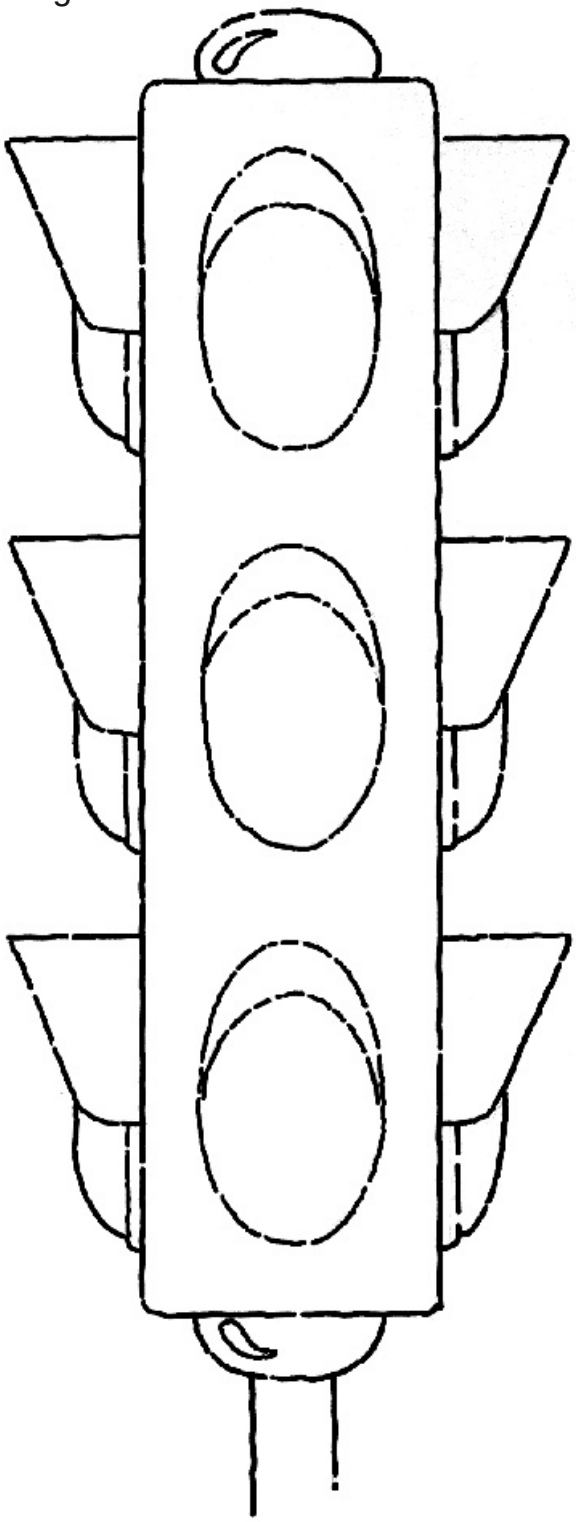

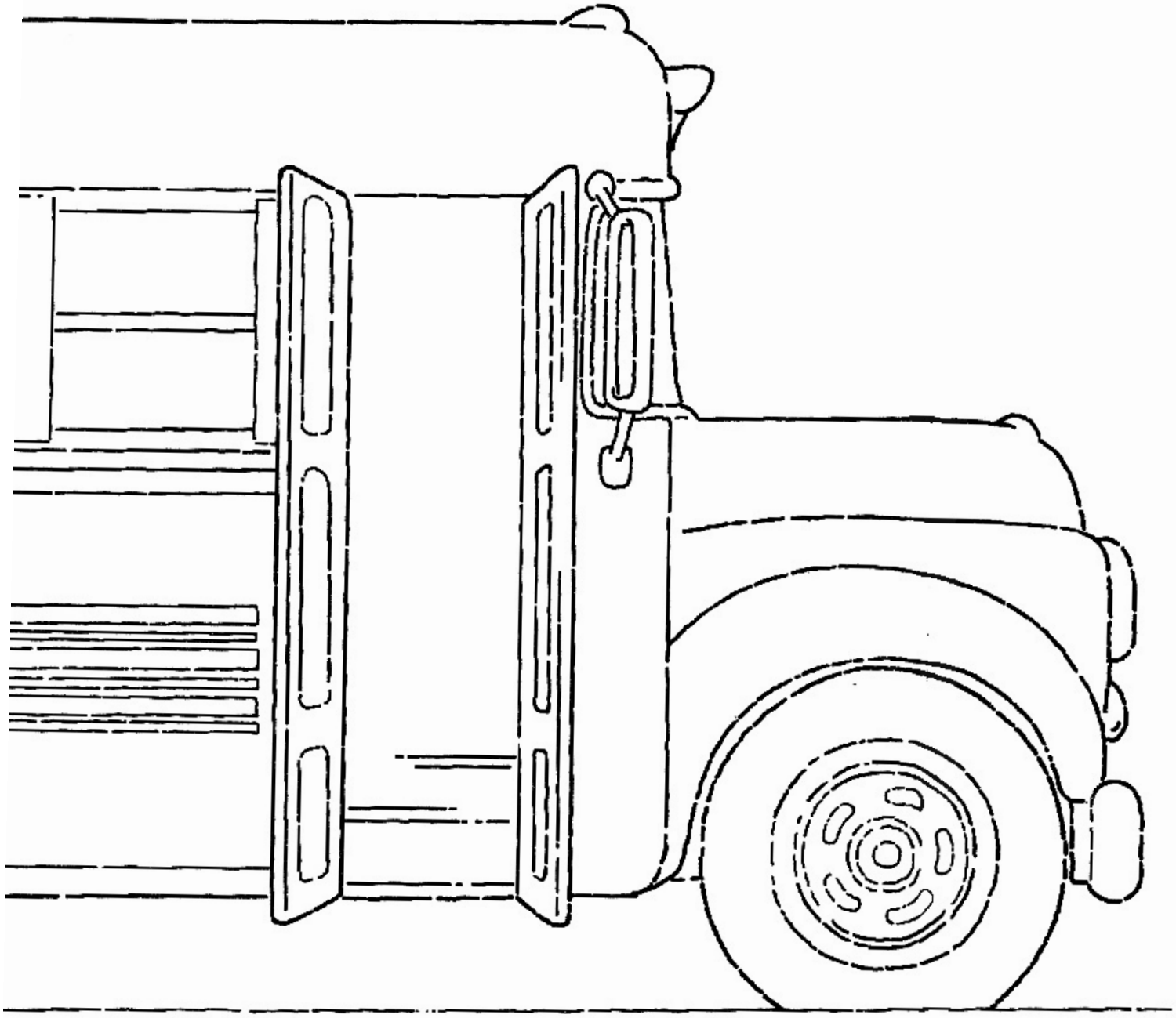

Stay 5 giant steps away
from the street when
waiting for a bus.

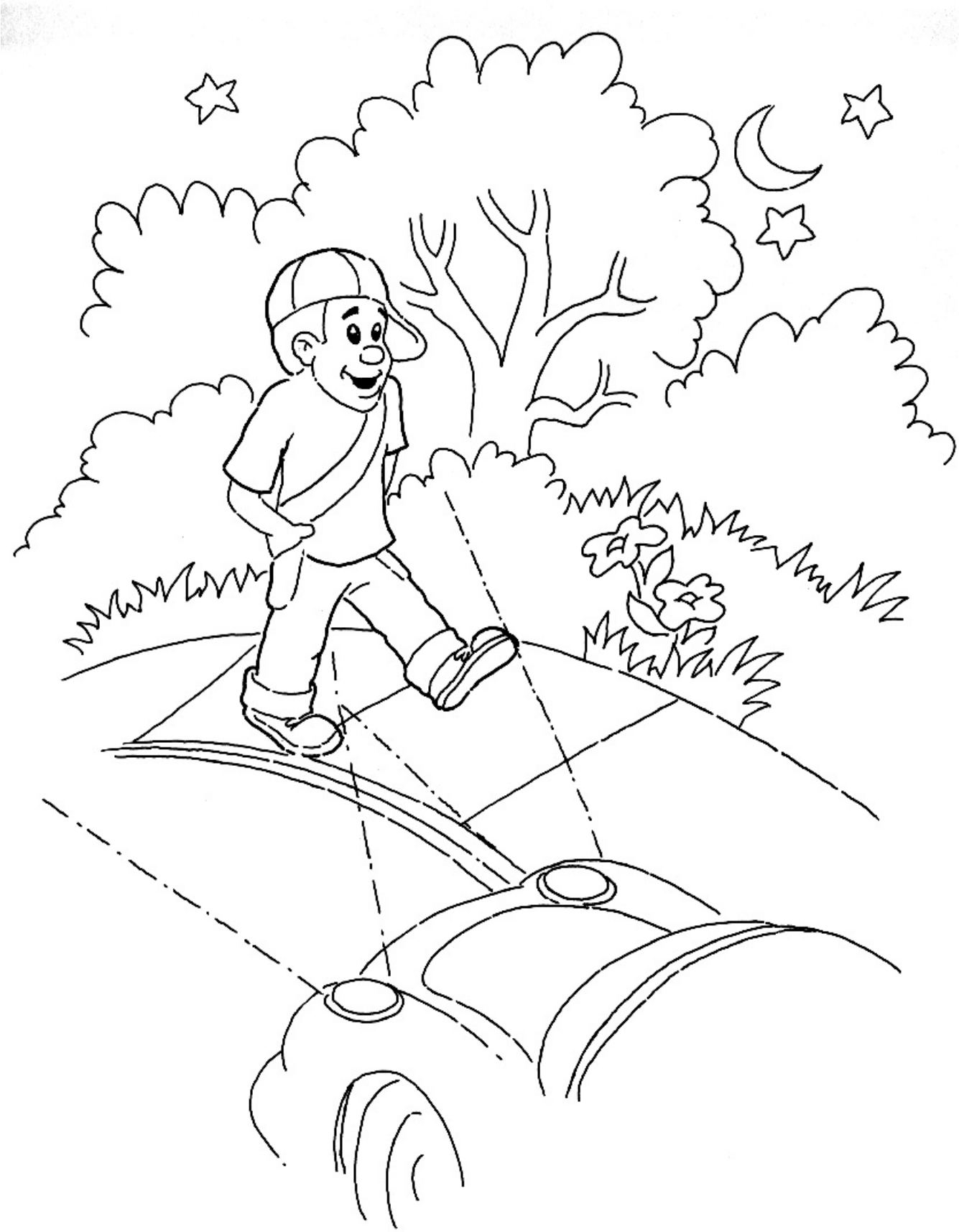

Be seen when it is dark!
Wear light, bright color and
reflective markers.

Safety City Verbal Test©

1.

2. "0" OR "911"

3.

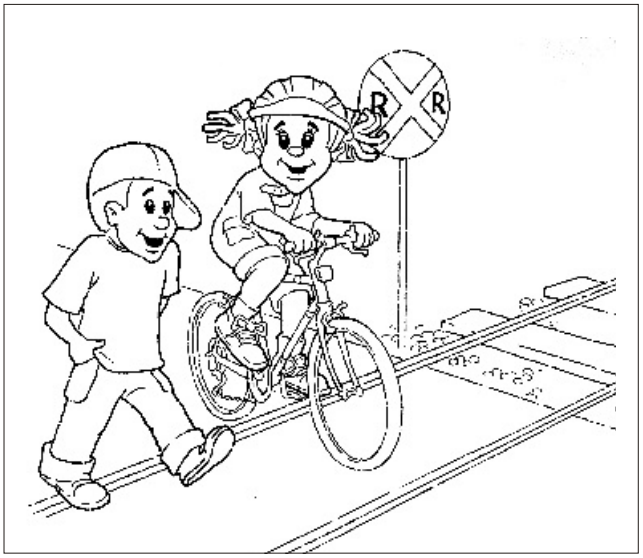

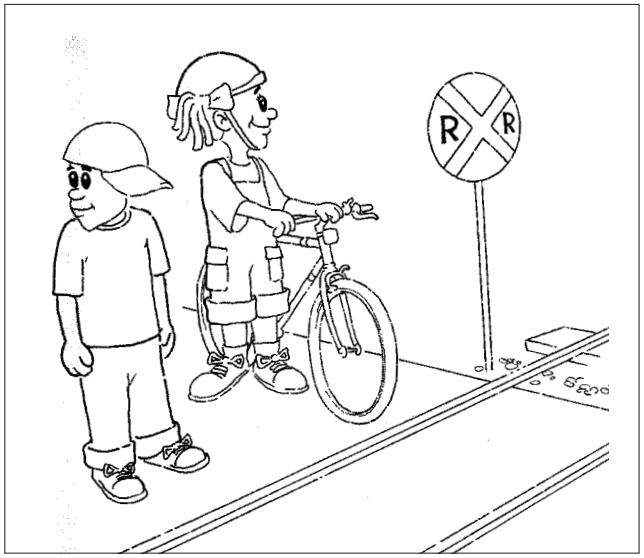

4.

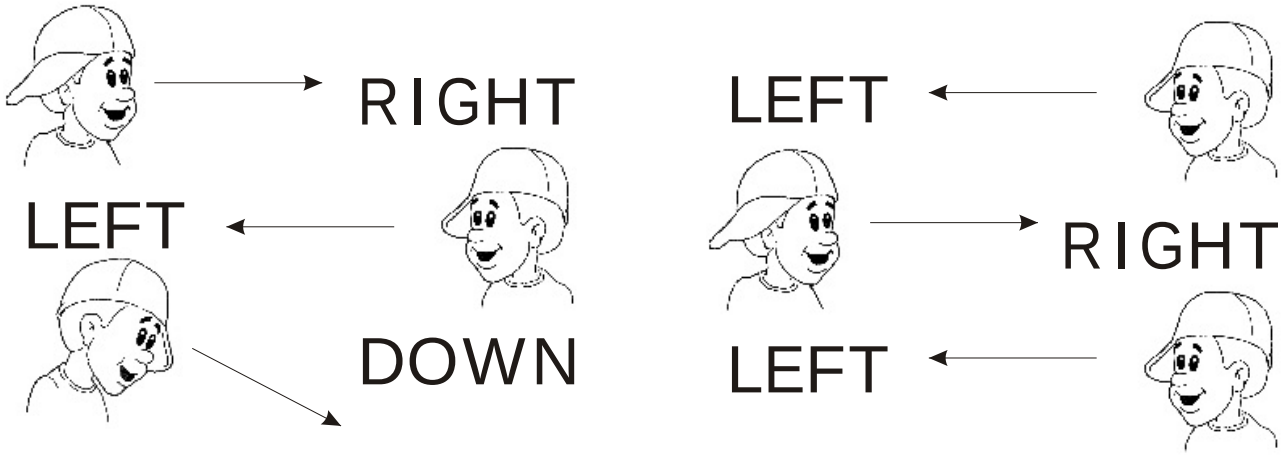

Stay Safe!
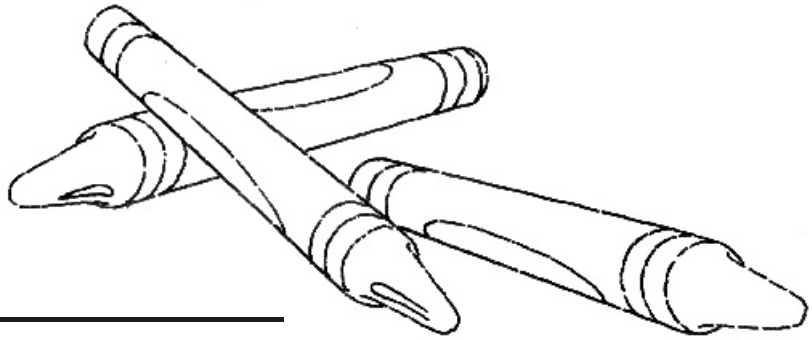
Draw a picture of you and a friend practicing
the safety; rules you learned at Safety City.